T2A63C-2 0,37KW 230/400V B5

Three-phase asynchronous motor in aluminum

Motor type	T2A63C-2 0,37KW 230/400V B5
Brand	BUSCK
Item number	P3020632e

Voltage V	Power kW	Frequency Hz	Current A	Speed rpm
230	0,37	50	1,7	2840
400	0,37	50	0,98	2840
460	0,43	60	0,98	3408

Duty	S1
Enclosure	IP55
Insulation class	F
Cooling	IC411 (TEFC)
Max. ambient temp.	40°C
Min. ambient temp.	-20°C
Max. temp. rise	80 K
Max altitude, masl	1000
Torque, Nm	1,24
Starting torque ratio	2
Pull up torque ratio	1,8
Pull out torque ratio	2,4
Starting current ratio	5,1

Efficiency class	IE2
Efficiency, load 100%	69,8
Efficiency, load 75%	68,5
Efficiency, load 50%	62,6
Power fact, load 100%	0,78
Painting	Standard
Color	RAL 9005
Weight kg	4,6
Sound pressure Lp dB(A)	62
Bearing DE	6201 2RZ C3
Bearing NDE	6201 2RZ C3
Balance grade	Normal
Inertia kgm2	0,0003030405
Cable entries	1xM20

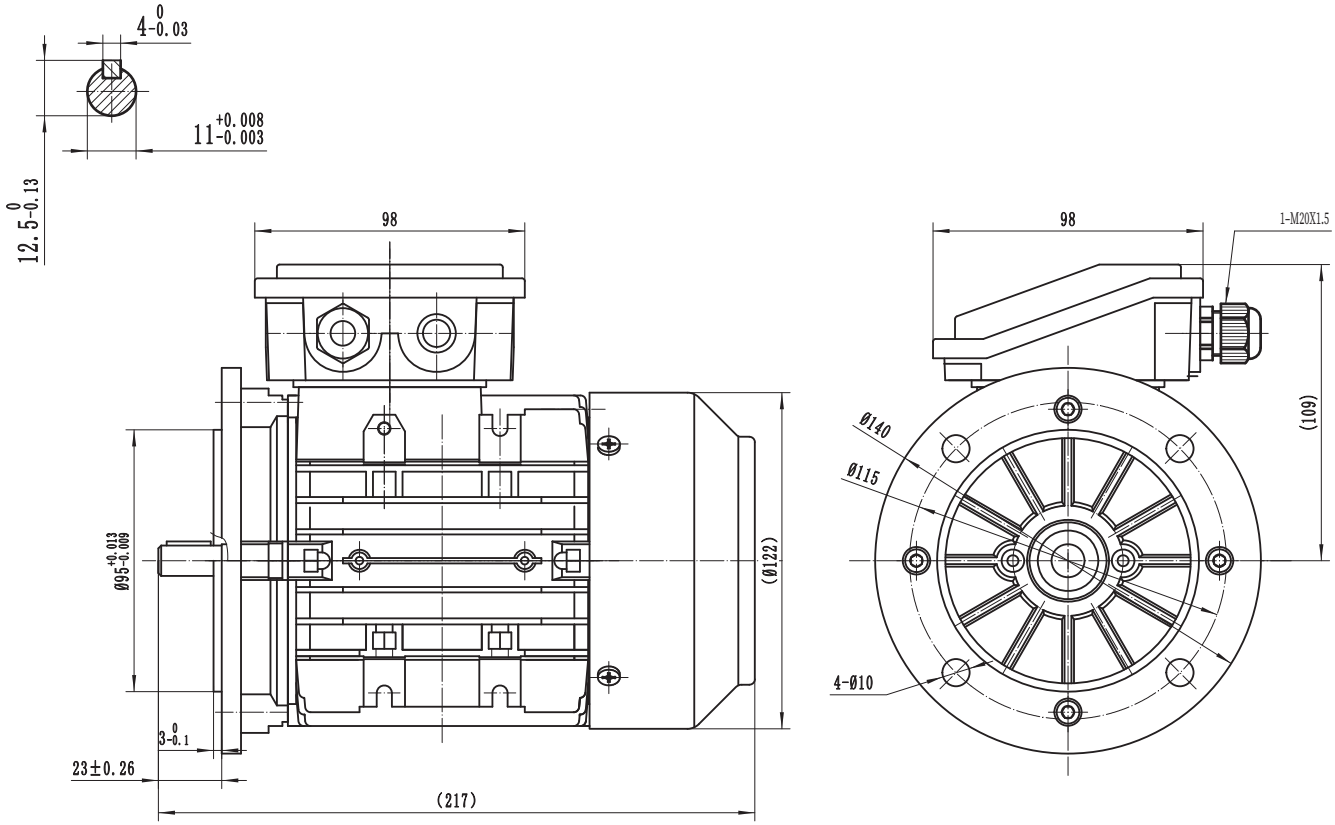

BUSCK
www.busck.eu

Busck & Co AB
Gamla Riksvägen 14
428 32 Göteborg
Sweden
556027-1990
info@busck.se

Busck & Co ApS
Postboks 108
0900 København C
Denmark
info@busck.eu

Busck AS
Skibåsen 35C
4636 Kristiansand
Norway
info@busck.no